Chapter 5
Physics-based Online Cyber-Physical Neural Network Models for Real-time Hybrid Simulation

Faisal Malik, Liang Cao, James Ricles, and Austin Downey

Abstract Real-time hybrid simulation (RTHS) is an experimental testing methodology that divides a structural system into an analytical and an experimental substructure. The analytical and experimental substructures are modeled numerically and physically in the laboratory, respectively. The substructures are kinematically linked at their interface degrees of freedom, and the coupled equations of motion are solved in real-time to obtain the response of the complete system. A key challenge in applying RTHS to large or complex structures is the limited availability of physical devices, which makes it difficult to simultaneously represent all required experimental components in the experimental substructure. The present study addresses this challenge by introducing a Physics-based Online Cyber-Physical Neural Network (OCP-NN) model. The physics-based OCP-NN model leverages real-time data from a single physical device (i.e., the experimental substructure) to replicate its behavior at other locations in the system, thereby significantly reducing the need for multiple physical devices. The proposed method is demonstrated through RTHS of a two-story reinforced concrete frame subjected to seismic excitation and equipped with Banded Rotary Friction Dampers (BRFDs) in each story.

Keywords Banded Rotary Friction Dampers · LSTM Neural Network · Online Model Updating · Physics-based Neural Network · Real-time Hybrid Simulation

Introduction

Real-time hybrid simulation (RTHS), also known as cyber-physical simulation, is an experimental testing methodology that integrates numerical modeling and physical testing to evaluate the dynamic response of structural systems subjected to realistic loading scenarios such as earthquakes, wind, and tsunami. In a RTHS, the structural system is divided into an analytical and an experimental substructure. The analytical substructure is modeled numerically, such as through finite element modeling, while the experimental substructure is physically present in a laboratory. The two substructures are kinematically linked at their interface degrees of freedom (DOF), and the resulting equations of motion are solved in real-time, allowing an accurate evaluation of the system's performance under dynamic loading.

A significant challenge in RTHS occurs when the number of experimental components installed in a structure exceeds the number of physical devices available in the laboratory. To address this limitation a novel online cyber-physical neural

Faisal Malik
Graduate Research Asst., Civil & Environmental Engineering, Lehigh Univ, Bethlehem, PA 18015
e-mail: mamc22@lehigh.edu

Liang Cao
Assistant Professor, University of Mississippi, Oxford, MS.
e-mail: lcao2@olemiss.edu

James Ricles
Professor, ATLSS Engineering Research Center, Lehigh Univ, Bethlehem, PA 18015
e-mail: jmr5@lehigh.edu

Austin Downey
Associate Professor, Mechanical Engineering, University of South Carolina, SC 29208
e-mail: AUSTINDOWNEY@sc.edu

© The Author(s), under exclusive license to River Publishers 2026

Kristin B. Zimmerman, PhD (eds.), *Data Science in Engineering, 2026, Vol. 9*, Conference Proceedings of the Society for Experimental Mechanics Series, https://doi.org/10.13052/rp-9788743814207

network method was developed by Malik et al. [1]. In the framework, one or more experimental substructures of devices are modeled physically and a neural network (NN) model is used to model the remaining devices in the structure. This NN model takes real-time data from the physical device to enhance its prediction accuracy at remaining locations in the structure. The framework was validated on a two-story reinforced concrete (RC) frame equipped with a banded rotary friction damper (BRFD) [2] located at each story and subjected to seismic excitations.

The BRFD features a rotating drum with three steel bands, lined with a ceramic friction material (GGA-Cured, Rigid), wrapped around the drum. The pretension force in the bands is applied through two Tolomatic RSA50 BN02 electric actuators with a stroke of $\pm$ 89 mm. When subjected to external excitation, the rotation of the drum produces an increasing contact pressure profile, which is minimum at the slack end and maximum at the taut end of the bands. As the drum rotates, a frictional torque is produced to counteract the applied force. This phenomenon, known as the self-energizing mechanism, allows the damper to achieve a high friction capacity with minimal energy input. The BRFD has a stroke of 45 mm and a variable force capacity that depends on the applied pretension force.

The RTHS configuration is shown in Figure 1. In the RTHS framework, the structural system is divided into three different substructures: (a) the analytical substructure, which numerically models the frame without the dampers; (b) the experimental substructure, which physically represents the first story damper; and, (c) the OCP-NN model which numerically models the second story damper. The analytical substructure is numerically modeled in HyCOM-3D [3]. The beams and columns are modeled using explicit force-based fiber elements (FBE) with RC sections. The braces are modeled using elastic beam column elements, and the geometric nonlinearities are accounted though a lean-on P$-\Delta$ column.

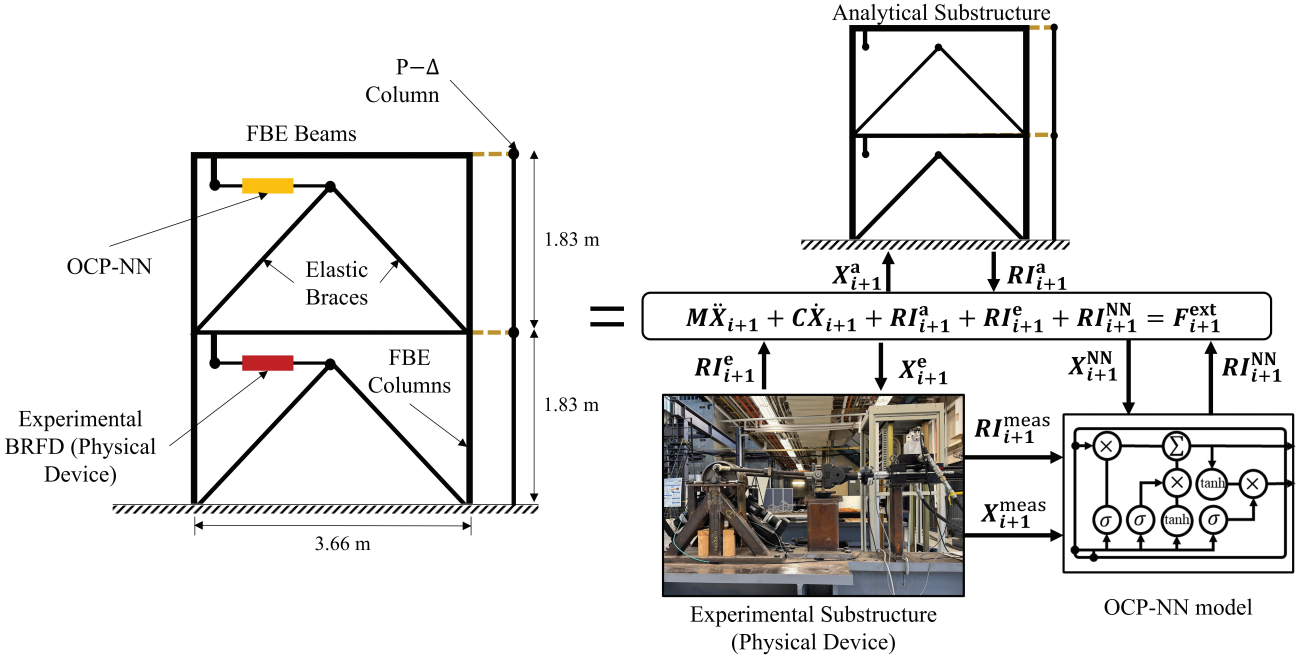

Fig. 1 RTHS configuration with the OCP-NN model

In the RTHS, the model based explicit integration algorithm MRK-α [4] is used to solve the weighted equations of motion. The algorithm determines the displacement and velocity of the current timestep based on the calculated displacement, velocity and acceleration at the previous timestep. Then, the displacement of the analytical substructure $\boldsymbol{X}^{\mathrm{a}}_{i+1}$ is imposed onto the substructure to obtain its restoring force vector $\boldsymbol{RI}^{\mathrm{a}}_{i+1}$. Simultaneously, the damper deformation at the first story is imposed onto the physical device using hydraulic actuators to obtain its restoring force $\boldsymbol{RI}^{\mathrm{e}}_{i+1}$. The measured response of the BRFD, including its measured force, deformation and the tension forces in the two electric actuators along with the deformation at the second story damper are input to the OCP-NN model to obtain the NN's restoring force $\boldsymbol{RI}^{\mathrm{NN}}_{i+1}$. Once the restoring forces from the three substructures are obtained, the global restoring force vector is assembled and the acceleration of the current timestep is completed. The integration algorithm then proceeds to the next timestep. This iterative procedure is repeated until the simulation is completed.

Architecture of the Physics-Based OCP-NN Model

The architecture of the physics-based OCP-NN model is shown in Figure 2. As discussed earlier, the inputs to the physics-based OCP-NN model at each timestep are the measured responses from the physical device, which include the measured force and deformation, and the measured tension forces in the two electric actuators. The physics-based OCP-NN model also uses the deformation at the location of the NN model as its input and predicts the parameters of a numerical model of the device in real-time. These parameters are passed through a physics layer, which is based on the constitutive model of the physical device to predict the force at the location of the physics-based OCP-NN model.

For the device used in the current study i.e., the BRFD the constitutive model is based on the LuGre dry friction model [5]. The output force from the LuGre dry friction model is given by:

$$F = \sigma_0 z + \sigma_1 \dot{z} + \sigma_2 v \tag{1}$$

where v is the velocity at the interface between the drum and the bands, σ_0 is the aggregate bristle stiffness, σ_1 is the microdamping, and σ_2 is the viscous friction. z is an evolutionary variable given by:

$$\dot{z} = v - \sigma_0 \frac{|v|}{g(v)} z \tag{2}$$

where $g(v) = F_c + (F_s - F_c)\, e^{-\left(\frac{v}{v_s}\right)^2}$, F_s is the static friction, F_c is the coulomb friction, and v_s is the stribeck velocity.

For the studied device, F_c and F_s depend on the applied pretension force and are therefore determinate. σ_2 is taken to be zero as the friction force is not dependent on velocity. Therefore, the physics-based OCP-NN model predicts the two parameters σ_0 and σ_1 in real-time.

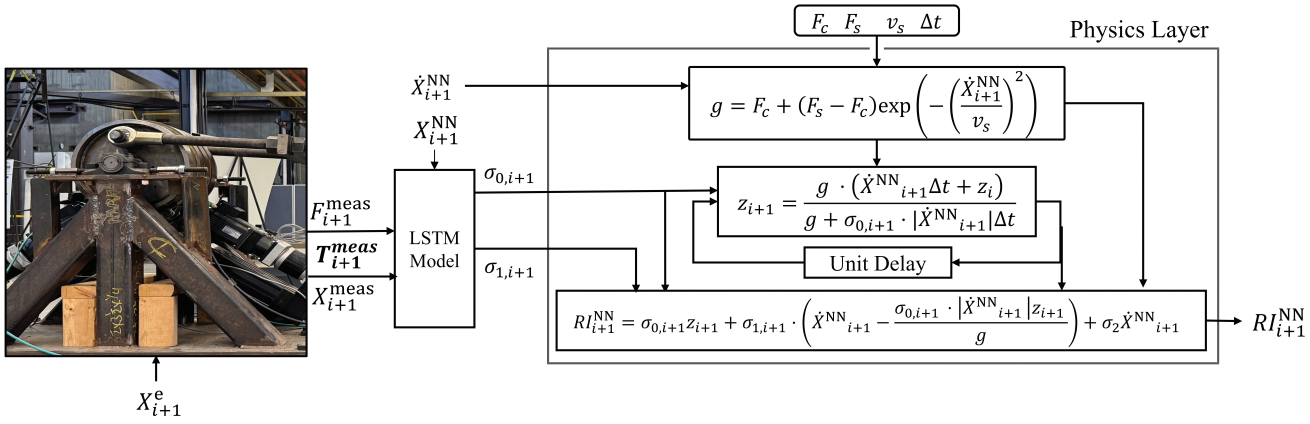

Fig. 2 Architecture of the Physics-based OCP-NN model

The architecture of the LSTM model used in the physics-based OCP-NN model is shown in Figure 3. The measured responses from the physical device and the input deformation of the OCP-NN model are input to two LSTM layers with 16 neurons each to obtain a higher dimensional representation of the inputs. The output from these two layers is concatenated and passed through two consecutive LSTM layers of 48 neurons each. The output from the final LSTM layer is then passed through a dense layer to get the two output quantities σ_0 and σ_1 at each timestep. The physics-based OCP-NN model is trained using the Adam optimizer with an initial learning rate of 0.001, which is decayed by 2% every 150 epochs. A batch size of five is used for training the model. It is important to regularize the NN model for applications in RTHS [6]. Therefore, a dropout of 10% after each layer is used as the regularization method.

To generate the training data, a suite of ground motion records is obtained from the PEER NGA West2 database and numerical simulations of the RC frame are performed using a numerical model of the BRFD (i.e., the LuGre model) to obtain the damper deformations at the first and second story. These deformations are subsequently imposed on the physical device through hydraulic actuators to obtain the corresponding measured forces. These force deformation pairs are then assembled to form the training and validation dataset.

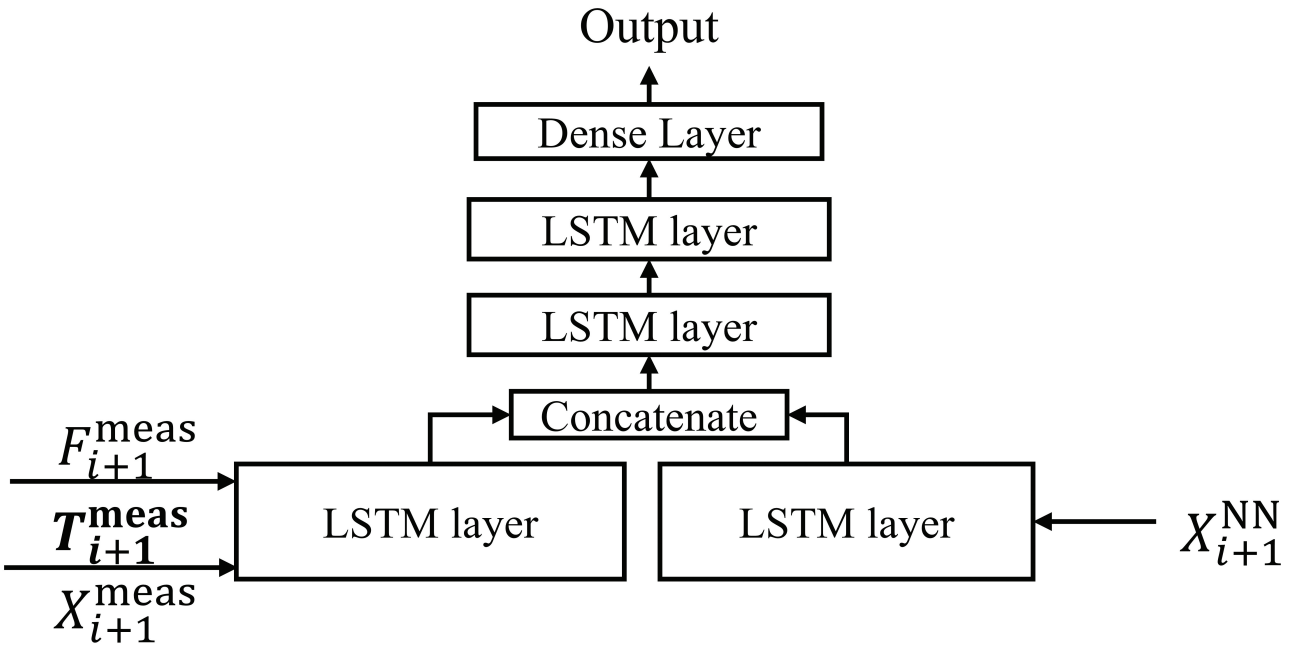

Fig. 3 Architecture of the LSTM model utilized in the physics-based OCP-NN model

Validation of the Physics-Based OCP-NN Model

This section presents the results from the validation of the physics-based OCP-NN model on harmonic excitation and seismic excitations. Figure 4 presents a comparison between the measured and predicted force of the BRFD under a harmonic excitation with an amplitude of 16.5 mm and a frequency of 0.5 Hz. As shown in the figure, the predicted response matches the measured data well, yielding a normalized root mean square error (NRMSE) of 3.72%. Beyond demonstrating accurate prediction capability, the physics-based OCP-NN model also provides enhanced interpretability of the system behavior. In particular, the model captures the characteristic *backlash* phenomenon in the BRFD response, which manifests as a stiffness reduction during load reversal.

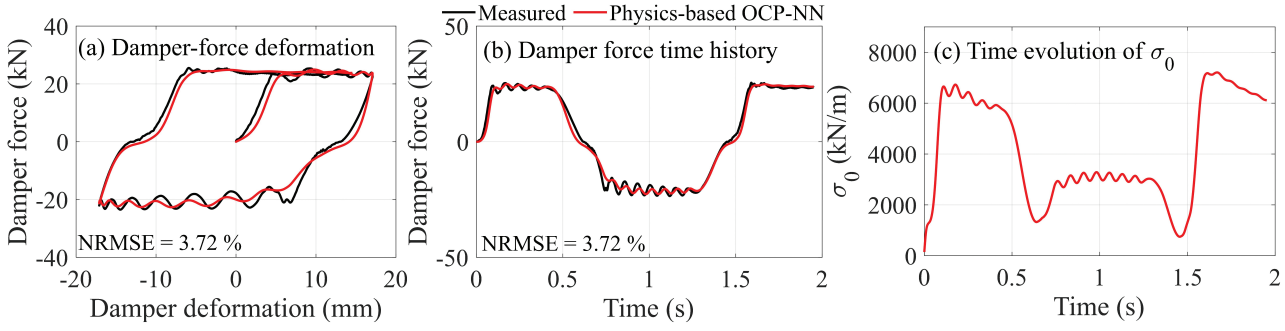

Fig. 4 Comparison of BRFD measured and predicted force for a harmonic excitation of amplitude 16.5 mm and frequency 0.5 Hz: (a) force-deformation; (b) force time history; (c) time evolution of σ_0.

This phenomenon is explained through the variation of the parameter, σ_0 (see Figure 4(c)). Specifically, σ_0 decreases during the de-energizing phase and subsequently increases during the re-energizing phase, thereby providing a clear physical basis for the observed hysteretic behavior.

For validating the physics-based OCP-NN model under seismic excitations, four earthquake ground motions were selected. Figure 5 presents a comparison between the measured and predicted BRFD force for the Kobe ground motion scaled

to the design basis earthquake (DBE) hazard level. As shown in Figure 5(a), the physics-based OCP-NN model accurately reproduces the response of the BRFD, with a normalized root mean square error (NRMSE) of 1.88%, thereby demonstrating its strong predictive capability. Moreover, the time evolution of σ_0 (Figure 5(b)) provides additional physical insight into the underlying mechanism. In particular, σ_0 does not remain constant but evolves continuously due to the interaction between the bands and the drums, highlighting the model's ability to link observed behavior with interpretable physical parameters.

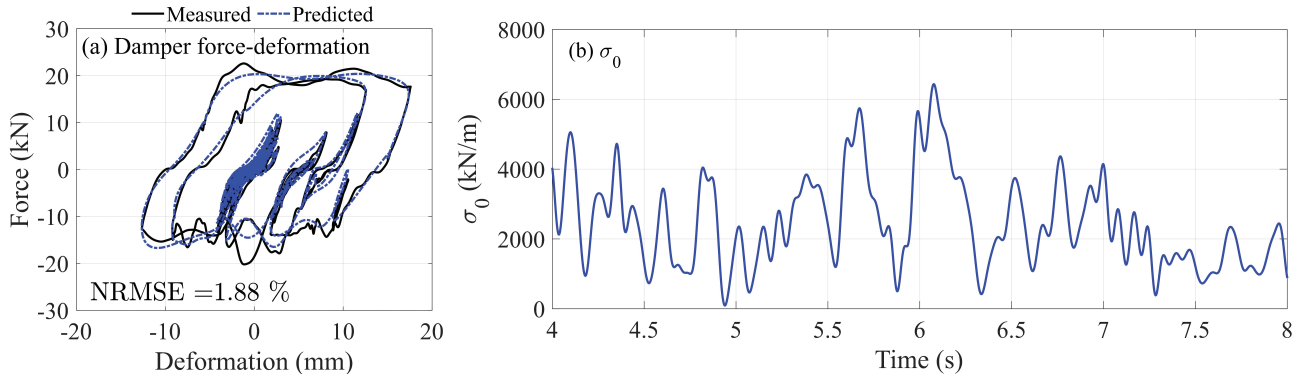

Fig. 5 Comparison of measured and predicted force for Kobe earthquake recorded at Kobe University: (a) force-deformation, and (b) time evolution of σ_0 between t = 4 and t = 8 sec

The mean μ and standard deviation (σ) of error quantities based on NRMSE, mean absolute error (MAE), R^2, and time response assurance criteria (TRAC) for the validation set are summarized in Table 1. The mean NRMSE of 2.61% with a relatively small standard deviation of 0.62% indicates that the predicted forces closely match the measured responses across different validation cases, with minimal variability. Similarly, the MAE with a mean of 0.76 and a standard deviation of 0.19 confirms that the model achieves low pointwise discrepancies in reproducing the force–deformation response. The mean and standard deviation for the R^2 value is 0.95 and 0.04, respectively. R^2 values close to unity further validates the NN model's ability to capture the overall response trends. Importantly, the TRAC values achieve a mean of 0.97 with a narrow variability of 0.02, highlighting the capability of the OCP-NN model to preserve the temporal characteristics.

Table 1 Mean and standard deviation of error metrics on the validation dataset

Metric	NRMSE (%)	MAE	R^2	TRAC
$\mu \pm \sigma$	2.61 ± 0.62	0.76 ± 0.19	0.95 ± 0.04	0.97 ± 0.02

RTHS Results

The Northern Calif-03 ground motion recorded at the Ferndale City Hall station and scaled to the DBE hazard level was used in the RTHS. The corresponding roof displacement and second-story damper deformation responses are shown in Figure 6, while the moment–curvature relationships at the base of the first-story column and at the end of the first-floor beam are presented in Figure 7. As can be observed, the structure undergoes pronounced nonlinear behavior during the excitation. In particular, the moment–curvature plots (Figure 7) clearly exhibit nonlinear hysteretic response, indicating the development of inelastic deformations in both the column and the beam. Moreover, residual roof displacement is evident in Figure 6(a), highlighting the accumulation of permanent deformation in the global system.

To further assess the accuracy of the physics-based OCP-NN model, the second-story damper deformation obtained during the RTHS was re-imposed on the physical device following the RTHS to record the corresponding measured force. Figure 8 shows a comparison between the measured and predicted force–deformation responses. As illustrated, the predicted response closely follows the measured behavior, achieving a normalized root mean square error (NRMSE) of 4.84%. This strong agreement highlights the capability of the OCP-NN model to generalize beyond the real-time simulation and accurately reproduce the nonlinear response characteristics of the BRFD under imposed deformations.

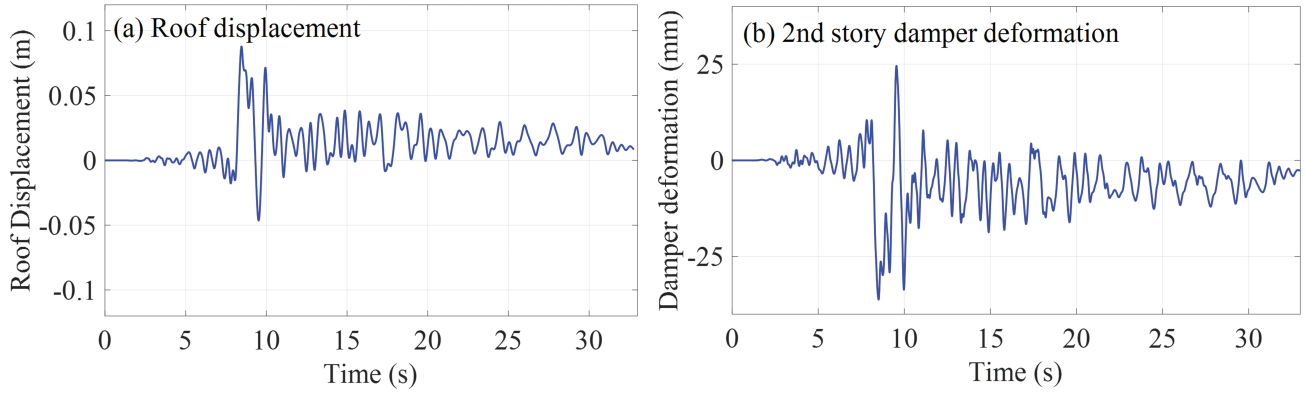

Fig. 6 Results from the RTHS of Northern Calif-03 ground motion: (a) Roof displacement, and (b) second story damper deformation

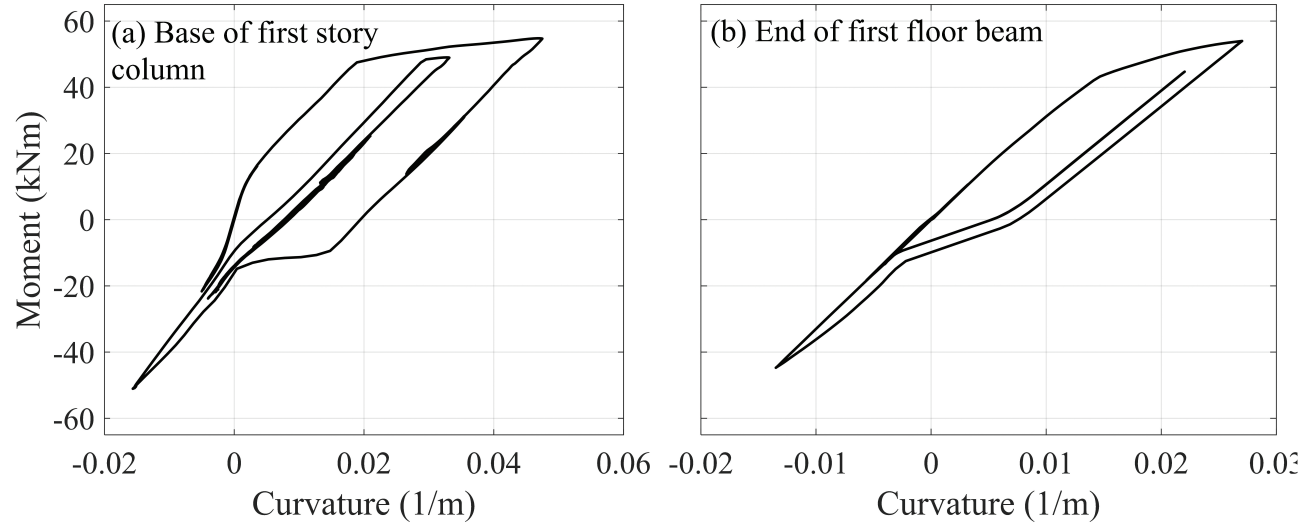

Fig. 7 Moment curvature obtained from the RTHS of Northern Calif-03 ground motion: (a) Base of first story column, and (b) end of first floor beam

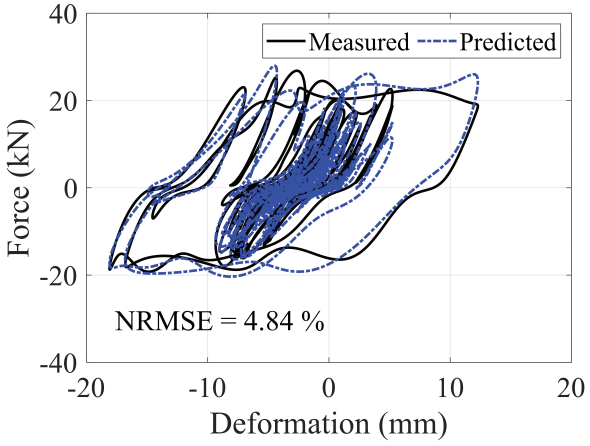

Fig. 8 Comparison of the measured and predicted force deformation during the RTHS of the Northern Calif-03 ground motion

Summary and Conclusions

This study presented a novel Physics-based Online Cyber-Physical Neural Network (OCP-NN) model for application in real-time hybrid simulation (RTHS) of structural and mechanical systems. The OCP-NN framework addresses the challenge of limited availability of physical devices in a RTHS by leveraging real-time data from a single physical device to replicate the behavior of additional devices at other locations in the system. The approach was demonstrated through the RTHS of a two-story reinforced concrete (RC) frame equipped with Banded Rotary Friction Dampers (BRFDs) in each story and subjected to seismic excitations.

The OCP-NN integrates a long short-term memory (LSTM) neural network with a physics-based constitutive model of the BRFD that is based on the LuGre dry friction formulation. The network predicts key parameters (σ_0 and σ_1) in real time, which are passed through a physics layer to compute the damper restoring forces.

Validation results showed strong predictive performance of the physics-based OCP-NN model, with low error quantities across multiple ground motions. For harmonic excitation, the model achieved an NRMSE of 3.72%, while for the Kobe ground motion scaled to the DBE hazard level, the error reduced to 1.88%. Across the validation dataset, the mean and standard deviation for the NRMSE, MAE, R^2, and TRAC were $2.61\% \pm 0.62\%$, 0.76 ± 0.19, 0.95 ± 0.04, and 0.97 ± 0.02, respectively. The results confirmed both high accuracy and robustness of the proposed approach. Importantly, the time evolution of σ_0 provided physical interpretability by capturing backlash effects and band–drum interactions.

The RTHS of the RC frame using the Northern Calif-03 ground motion further validated the framework. The system exhibited pronounced nonlinear and hysteretic behavior, including residual roof displacement and inelastic moment–curvature response in the columns and beams of the structure. When the second-story damper deformation obtained during the RTHS was re-imposed on the physical device, the OCP-NN reproduced a measured force–deformation response with an NRMSE of 4.84%, demonstrating its ability to generalize beyond the real-time simulation.

Acknowledgments This material is based upon work supported by the National Science Foundation (NSF) under Grant Nos. CCF-2234921, and CMMI-1463497, and from MTS Corporation. The experiments reported herein were performed at the NHERI Lehigh Experimental Facility, whose operation is supported by a grant from the NSF under Cooperative Agreement No. CMMI-2037771. The authors are grateful for the support of the sponsors and acknowledge the effort of the NHERI Lehigh Experimental Facility staff. The opinions, findings, conclusions and recommendations expressed herein are those of the authors and do not necessarily reflect the views of the NSF or the other sponsors.

References

1. F. N. Malik, L. Cao, J. Ricles and A. Downey, “Online Cyber-Physical Neural Network Model for Real-Time Hybrid Simulation,” *Earthquake Engineering & Structural Dynamics* , **54**(15): 3457–3474, 2025.
2. A. Downey, L. L. S. Cao, D. Taylor and J. Ricles, "High Capacity Variable Friction Damper Based on Band Brake Technology," *Engineering Structures*, **113**: 287-298, 2016.
3. J. Ricles, C. Kolay and T. Marullo, "HyCoM-3D: A Program for 3D Multi-Hazard Nonlinear Analysis and Real-Time Hybrid Simulation of Civil Infrastructure Systems," ATLSS Engineering Research Center, Report No. 20-02, Lehigh University, Bethlehem, 2020.
4. C. Kolay and J. Ricles, "Improved Explicit Integration Algorithms for Structural Dynamic Analysis with Unconditional Stability and Controllable Numerical Dissipation," *Journal of Earthquake Engineering*, **23(**5): 771-792, 2017.
5. C. Canudas-de-Wit, H. Olsson, K. Åström and P. Lischinsky, "A new model for control of systems with friction," *IEEE Transactions on Automatic Control*, **40**(3): 419 - 425, 1995.
6. F. N. Malik, D. N. Gorini, J. Ricles and M. Rahnemoonfar, "Multi-Physics Framework for Seismic Real-Time Hybrid Simulation of Soil–Foundation–Structural Systems," *Engineering Structures*, **334**: 120247, 2025.