Chapter 17
Damping Identification Using FBG Sensors in Controlled Thermal and Pressure Conditions

Lorenzo Sclafani, Antonello Binni, Silvia Milana, Antonio Culla, and Antonio Carcaterra

Abstract

Low-intensity mechanical vibrations become critical in several domains of experimental physics, such as gravitational wave detection, the search for neutrinoless double beta decay, and quantum computing. In these contexts, extremely accurate measures require high isolation from external vibrational sources and challenging sensor sensitivity. In extreme working conditions, as cryogenic temperatures and high vacuum, the uncertainties in material properties represent a significant limitation for the stability and accuracy of measurements.

Although stiffness has been extensively studied, damping remains a significantly less understood phenomenon. Due to the poorly understood connection between macroscopic and microscopic effects, current models of damping are incomplete. While it is often approximated in practice as a constant parameter, experimental evidence suggests that damping is highly dependent on both temperature and frequency.

This work aims to provide a comprehensive characterization of damping across a wide range of environmental conditions, in order to investigate its behaviour and its intrinsic dependence on variables such as temperature and pressure. To this end, a novel experimental setup is proposed, employing Fiber Bragg Grating (FBG) sensors and a single-stage pulse tube cryostat, to extract the damping characteristics of a cantilever beam in controlled conditions. Unlike traditional approximations, a more sophisticated damping model is presented, distinguishing different damping contributions and highlighting their dependence on environmental variables.

The results of this study are expected to deepen the understanding of damping mechanisms under extreme conditions, thereby supporting the design and predictive modeling of dynamic systems operating in such environments.

Keywords Damping · Experimental identification · Fiber optics · FBGs · Cryogenics

Introduction

Damping refers to the mechanisms by which the vibratory energy of a system is irreversibly dissipated, closely linked to the thermodynamic concept of dissipation, i.e., the conversion of mechanical energy into heat. Together with stiffness and mass, it represents one of the fundamental parameters required to predict the dynamic response of a system [1]. In structural applications, the measured damping typically results from the superposition of different dissipation mechanisms [2], whose identification remains challenging and often leads to oversimplifications.

Existing dissipative models are essentially phenomenological [3, 4, 5, 6], and a comprehensive description of the process, as the transfer of energy from a macroscopic to a microscopic level (i.e., particles' kinetic energy, hence temperature), is still missing. Nevertheless, recent contributions, such as Carcaterra and Akay's [2, 7, 8] have shown the field's increasing interest towards physically motivated models.

Lorenzo Sclafani
Department of Physics and Astronomy "G. Galilei", University of Padua, Padua, Italy,
e-mail: lorenzo.sclafani@phd.unipd.it

Lorenzo Sclafani · Antonello Binni · Silvia Milana · Antonio Culla · Antonio Carcaterra
Department of Mechanical and Aerospace Engineering, Sapienza University of Rome, Rome, Italy
e-mail: lorenzo.sclafani@uniroma1.it; antonello.binni@uniroma1.it; silvia.milana@uniroma1.it;
antonio.culla@uniroma1.it; antonio.carcaterra@uniroma1.it

© The Author(s), under exclusive license to River Publishers 2026

Kristin B. Zimmerman, PhD (eds.), *Topics in Modal Analysis & Parameter Identification in Structural Dynamics, 2026, Vol. 8*,
Conference Proceedings of the Society for Experimental Mechanics Series, https://doi.org/10.13052/rp-9788743814191

A deeper understanding of damping would significantly improve the prediction of structural behavior, particularly under extreme conditions such as cryogenic temperatures and vacuum. These environments, driven by remarkable advancements in vacuum and cooling technologies, are central to applications in medicine, aerospace, and experimental physics. In particular, many modern large-scale fundamental physics experiments operating in cryogenics environments, such as gravitational wave detectors, neutrinoless double beta decay searches, and quantum computing systems, face significant challenges in sensor sensitivity when measuring small mechanical disturbances [9, 10]. A key issue is the limited knowledge of fundamental properties required for accurate system design, especially when leveraging amplification near resonance. While the mass is constant and stiffness is reasonably characterized, damping remains poorly understood, highlighting a significant gap in the literature.

In this context, this study aims to fill the crucial gap in the understanding of damping by proposing a novel experimental approach to characterize the damping of a simple cantilever beam over controlled temperature and pressure conditions. Firstly, the proposed theoretical model is briefly discussed. It accounts for both internal structural damping and fluid damping, explicitly introducing temperature dependence through constitutive relationships and fluctuation–dissipation arguments. Then, the experimental setup, leveraging a Pulse Tube cryocooler and Fiber Bragg Grating (FBG) optical sensors, is presented in detail.

Theoretical Damping Model

Slender continuous structures may be modeled as simple Euler–Bernoulli beams. When subjected to an external load $p(x,t)$, the beam's undamped transverse response $w(x,t)$ can be expressed as:

$$\frac{\partial^2}{\partial x^2}\left(EI\frac{\partial^2 w(x,t)}{\partial x^2}\right)+\rho A\frac{\partial^2 w(x,t)}{\partial t^2}=p(x,t) \tag{1}$$

where, E is the Young modulus, I the area moment of inertia, ρ the density and A the cross-section of the beam. Damping is often introduced into Equation 1 through an additional term proportional to the beam's velocity. This work, however, aims to find a more complete description of damping as a superposition of simultaneous phenomena.

The proposed damping model takes into account two fundamental dissipation mechanisms of structures: within the solid itself and due to the interaction with the surrounding fluid. The former, commonly referred to as internal or material damping, relates to the process by which the kinetic energy of a solid, subjected to periodic motion, is converted into heat due to many microscopic sources (e.g., dislocation motion and molecular friction). The latter, known as fluid damping, refers to the energy dissipation caused by a fluid's resistance to the relative motion of an object. This resistance, or drag, opposes motion and converts part of the mechanical energy into thermal energy in the fluid.

The internal structural damping is modelled following one of the latest works of Carcaterra and Akay [8]. The authors introduce a model based on a loss-free oscillator connected to a piston to describe dissipation as the degradation of energy from macroscale ordered energy (mechanical energy) to a microscale disordered form (kinetic energy of the particles). Employing their dissertation to highlight the temperature dependence, a dissipative constitutive relationship describing stress as a function of strain, strain rate, and temperature is obtained:

$$\sigma\left(\epsilon,\dot{\epsilon},T\right)=E\epsilon+\sigma_d\left(\dot{\epsilon},T\right) \tag{2}$$

On the other hand, the fluid damping is described using an older model of Akay and Carcaterra [2]. A piston in a cylinder filled with freely moving particles (representative of an ideal gas) is used to understand how the piston's energy irreversibly converts into the gas's thermal energy. By implementing the characteristic approach of the Fluctuation-Dissipation theorem, the net force resulting from the interaction with the surrounding gas can be expressed as the sum of two components. One, proportional to the velocity of the structure, can be interpreted as a damping term with a temperature-dependent damping coefficient $\gamma(T)$. While the other remains as a fluctuation $\tilde{f}(t)$, hence a random forcing term on the right-hand side of the system equation.

Therefore, by introducing these damping effects into Equation 1, the beam's damped equation of motion yields:

$$\frac{\partial^2}{\partial x^2}\left(EI\frac{\partial^2 w(x,t)}{\partial x^2}+\int\sigma_d\left(\dot{\epsilon}(z),T\right)z dA\right)+\rho A\frac{\partial^2 w(x,t)}{\partial t^2}+\gamma(T)\frac{\partial w(x,t)}{\partial t}=p(x,t)+\tilde{f}(t) \tag{3}$$

where the material damping effect appears as the integral term involving σ_d, resulting from the new constitutive relationship effect on the bending momentum. Both σ_d and γ can now be written explicitly as functions of temperature.

Experimental Set-up

To validate the theoretical model presented in the previous section, an experimental campaign was designed to investigate damping under controlled thermal and pressure conditions. The simultaneous control of variables was achieved using a single-stage cryostat, available at the Department of Mechanical and Aerospace Engineering (DIMA) of La Sapienza University. The system employs a Stirling-type single orifice pulse tube refrigerator (PTR), capable of reaching a temperature of around $70\,K$ on a limited surface, known as the *cold head*. Commonly referred to as cryocoolers, these machines consist of a few basic components (Figure 1): a compressor with a rotary valve, heat exchangers, a regenerator, a pulse tube, an orifice, and a buffer volume. In steady-state conditions, the working fluid (helium) is forced to oscillate by periodic pressure waves generated by the rotary valve, external to the system. These pressure variations induce an alternating motion of the fluid through the regenerator and in and out of the buffer through the orifice. This periodic motion activates a particular thermal exchange process as the gas flows through the regenerator: it cools down as it moves toward the cold-end heat exchanger (i.e. the cold head) and heats up on the way back. Finally, the pulse tube allows the fluid temperature to rise again, while the orifice and reservoir control the phase shift between pressure and mass flow, minimizing the heat transfer to the cold head. One of the key advantages of this system is its ability to achieve cryogenic temperatures with no moving components in the cold region [11, 12, 13].

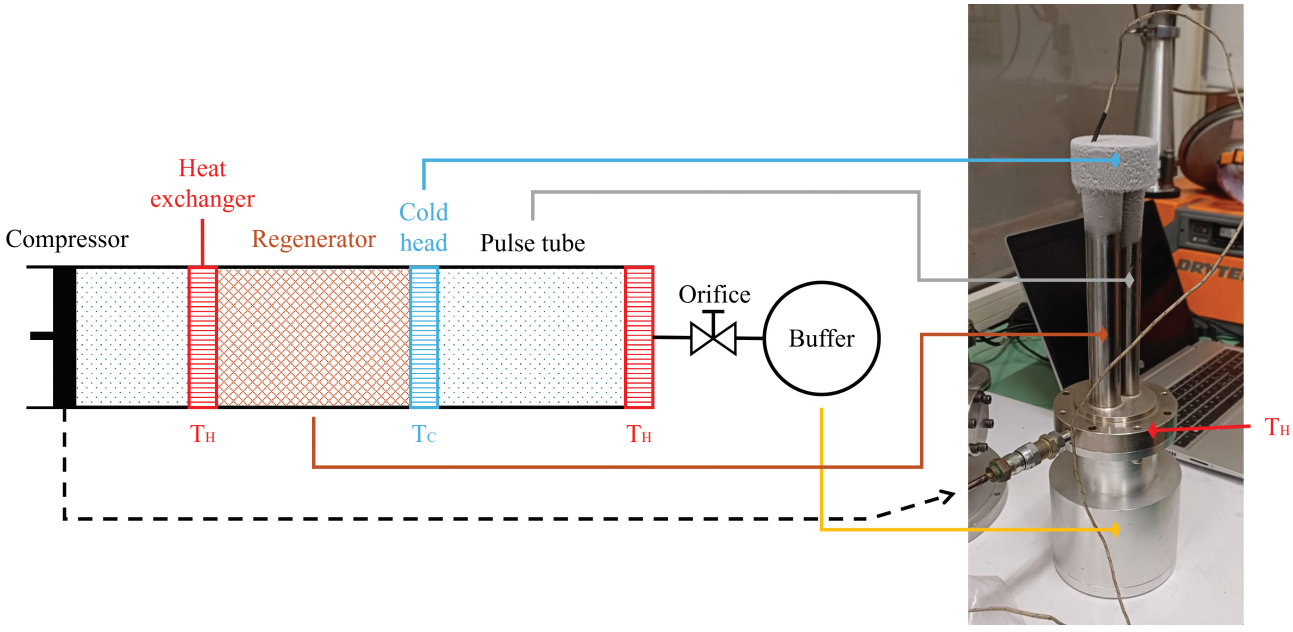

Fig. 1 Scheme of a typical PTR with reference to the cryocooler available at DIMA's lab, La Sapienza University

The PTR is inserted into the complementary vacuum chamber, creating a small experimental volume: a cylinder of approximately $100\,\text{mm}$ diameter and $60\,\text{mm}$ height. The pressure inside the chamber is controlled by a turbomolecular pump and measured with a FRG-700 Full Range Pirani Inverted Magnetron Gauge, reliable down to 5×10^{-9} mbar.

Within this controlled vacuum environment, the investigated system is a simple harmonic steel cantilever beam, directly fixed to the PTR's cold head. It has a length of $L = 40\,\text{mm}$, a width of $b = 10\,\text{mm}$, and a thickness of $h = 0.35\,\text{mm}$. An additional root length of $L_{\text{root}} = 15\,\text{mm}$ is included to ensure proper clamping conditions. Figure 2 shows the clamping system designed to place the beam parallel to the cold head surface. Two U-shaped plates grip the beam's root, while a disc of the same dimensions as the cold head presses them down. Since convection is ineffective under vacuum, this "sandwich" setup allows the beam to cool down through conduction at the fixed end, while enhancing radiative thermal exchange with the surrounding cold surfaces along its length.

Due to the small size of the beam and the high uncertainty in damping measurements, a non-contact excitation is preferred. In the proposed setup, the beam is excited by imposing a displacement on its fixed end through impact excitation of the outer shell of the cryostat. Such superimposed displacement, $u(t)$, on the fixture results in a uniform inertial load, $p(t)$, on the cantilever:

$$p(t) = -\rho A \ddot{u}(t), \tag{4}$$

where ρ is the beam's density and $A = h \cdot b$ is its cross-sectional area.

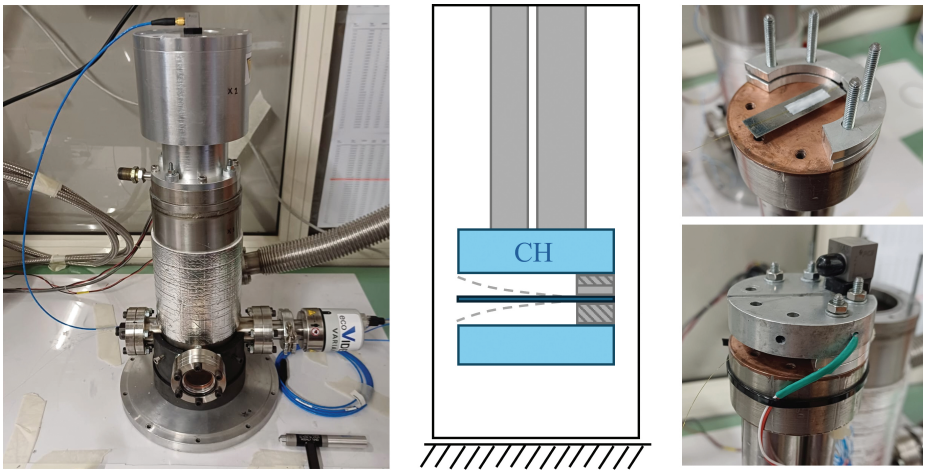

Fig. 2 Fully mounted cryostat with the sandwich clamping system, and schematic view of its interior

By preliminarily characterizing the cryostat through the transfer function between the outer shell and the fixture, the displacement at the fixed end can be inferred from the more accessible measurement of the outer cryostat response. For this purpose, triaxial accelerometers (PCB Piezotronics) and a Dewesoft Sirius acquisition system were employed.

Finally, the system response is measured in terms of strain using Fiber Bragg Grating (FBG) sensors. These optical sensors are an optimal choice thanks to their low invasiveness and well-documented ability to function in cryogenic environments [14, 15, 16, 17].

An FBG is a distributed Bragg reflector within an optical fiber, with periodic variations in the refractive index. This structure acts as an optical filter, reflecting a specific wavelength λ_B, called the Bragg wavelength, defined as:

$$\lambda_B = 2\, n_{eff}\, \Lambda \tag{5}$$

with n_{eff}, the effective refractive index, and Λ, the period of the grating.

External perturbations, such as temperature and strain, alter the grating period, shifting the reflected wavelength and enabling vibration sensing [17]. A schematic summary and visual representation of the FBG's working principle is given in Figure 3.

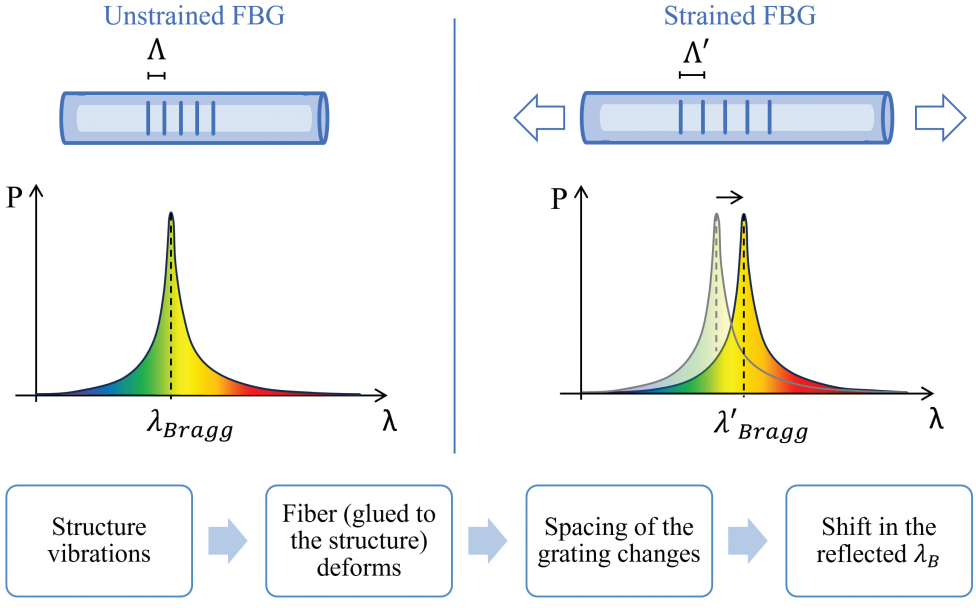

Fig. 3 Visual representation of FBG's working principle

Two FBGs are used in this experimental campaign. The first, glued to the beam using an equivalent of the Eccobond 286 A/B Epoxy suggested by [15], measures the strain. Its placement at $x_{FBG} = L/3$ is chosen so as not to coincide with the nodes of the first four modes of the cantilever. Meanwhile, the second FBG is left free to measure and compensate for thermal effects, as is common practice. From inside the cryostat, the fibers pass through a feedthrough and are connected to a Smartscan optical interrogator.

Figure 4 depicts the overall measurement setup.

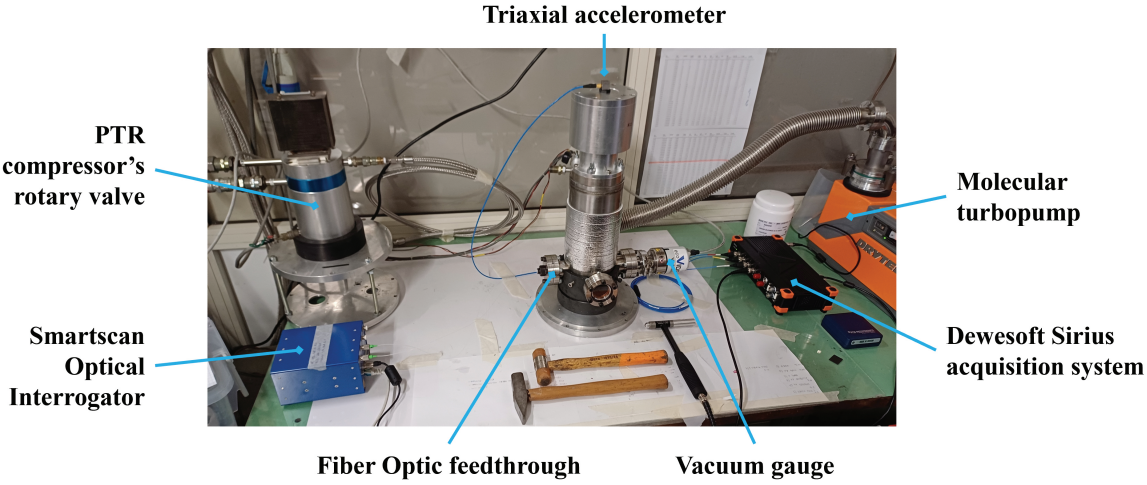

Fig. 4 Measurement setup

Conclusions

The experimental setup proposed in this study allows for the damping characterization of a cm-scale cantilever beam under controlled pressure and temperature conditions. Leveraging pulse tube cryocooler technology, it is possible to go down to cryogenic temperatures and mid-vacuum with minimal mechanical vibrations. Advanced optical sensors (FBGs) are used to measure the system, ensuring accurate and reliable data acquisition over time in such extreme conditions while avoiding the limitations of more intrusive techniques. The contemporary control over both temperature and pressure on the system is particularly relevant for the validation of advanced damping models that explicitly account for different dissipation mechanisms, such as the one proposed in this study. Indeed, control over the chamber pressure allows for neglecting the contribution of fluid–structure interaction, isolating the intrinsic internal structural damping. Meanwhile, the wide temperature range enables the investigation of the experimentally well-known damping-temperature relationship.

Although this work focuses on damping, the proposed setup could be implemented to characterize other fundamental properties (e.g., stiffness) and their relationship to environmental variables and extreme conditions. Nevertheless, many further improvements are possible. In particular, the design of the clamping system could be optimized to reduce uncertainties in boundary conditions and temperature gradients along the beam, while more sophisticated excitation methods could be introduced to expand the range and precision of the measurements.

Overall, the proposed methodology represents a promising step toward a more accurate and physically motivated characterization of damping, contributing to improving the design and prediction of dynamic systems under cryogenic and vacuum environments.

Acknowledgments This research was funded by the European Union – NextGeneration EU, Mission 4 Component 2 Investment 3.3 CUP C96E23000240005

References

1. Sestieri, A. and Carcaterra, A. "Vibroacoustic: The challenges of a mission impossible?". *Mechanical Systems and Signal Processing*, 34(1-2):1–18 (2013).

2. Akay, A. and Carcaterra, A. “Damping mechanisms”. In *Active and passive vibration control of structures*, pages 259–299. Springer (2014).
3. Levine, M.B. and White, C. “Material damping experiments at cryogenic temperatures”. In *Optical Materials and Structures Technologies*, volume 5179, pages 165–176. SPIE (2003).
4. Young Jr, C.P. and Buehrle, R.D. “Structural damping studies at cryogenic temperatures”. Technical report, National Aeronautics and Space Administration (NASA) (1994).
5. Le Bot, A., Carcaterra, A., and Mazuyer, D. “Statistical vibroacoustics and entropy concept”. *Entropy*, 12(12):2418–2435 (2010).
6. Tonazzi, D., Meziane, A., Culla, A., Biateau, C., Pepe, G., and Massi, F. “Material damping estimation within low-, medium-and high-frequency ranges”. *International Journal of Applied Mechanics*, 16(05):2450056 (2024).
7. Carcaterra, A. “New concepts in damping generation and control: theoretical formulation and industrial applications”. In *Variational Models and Methods in Solid and Fluid Mechanics*, pages 249–313. Springer (2012).
8. Carcaterra, A. and Akay, A. “Harmonic oscillator, dissipation, and thermodynamics”. *Journal of Applied Mechanics*, 92(4):041009 (2025).
9. Frasconi, F., Majorana, E., Naticchioni, L., Paoletti, F., and Perciballi, M. “A vertical accelerometer for cryogenics implementation in third-generation gravitational-wave detectors”. *Measurement Science and Technology*, 25(1):015103 (2013).
10. Chen, D., Naticchioni, L., Khalaidovski, A., Yamamoto, K., Majorana, E., Sakakibara, Y., Tokoku, C., Suzuki, T., Kimura, N., Koike, S., et al. “Vibration measurement in the kagra cryostat”. *Classical and Quantum Gravity*, 31(22):224001 (2014).
11. Park, J., Jeong, S., and Cha, J. “Development and experimental investigation of stirling-type pulse tube refrigerator (ptr) below 20 k; cold compressor and colder expander”. *International Journal of Refrigeration*, 75:64–76 (2017).
12. Richardson, R. and Evans, B. “A review of pulse tube refrigeration”. *International journal of refrigeration*, 20(5):367–373 (1997).
13. Wang, B., Chao, Y., Zhao, Q., Wang, H., Wang, Y., and Gan, Z. “A high efficiency stirling-type pulse tube refrigerator for cooling above 200 k”. *Energy*, 215:119120 (2021).
14. James, S.W., Tatam, R.P., Twin, A., Morgan, M., and Noonan, P. “Strain response of fibre bragg grating sensors at cryogenic temperatures”. *Measurement science and technology*, 13(10):1535 (2002).
15. Li, J., Neumann, H., and Ramalingam, R. “Design, fabrication, and testing of fiber bragg grating sensors for cryogenic long-range displacement measurement”. *Cryogenics*, 68:36–43 (2015).
16. Venkatesan, V. and Ramalingam, R. “Numerical and experimental investigation of fbg strain response at cryogenic temperatures”. In *IOP Conference Series: Materials Science and Engineering*, volume 171, page 012133. IOP Publishing (2017).
17. Wang, X., Guo, Y., Xiong, L., and Wu, H. “High-frequency optical fiber bragg grating accelerometer”. *IEEE Sensors journal*, 18(12):4954–4960 (2018).